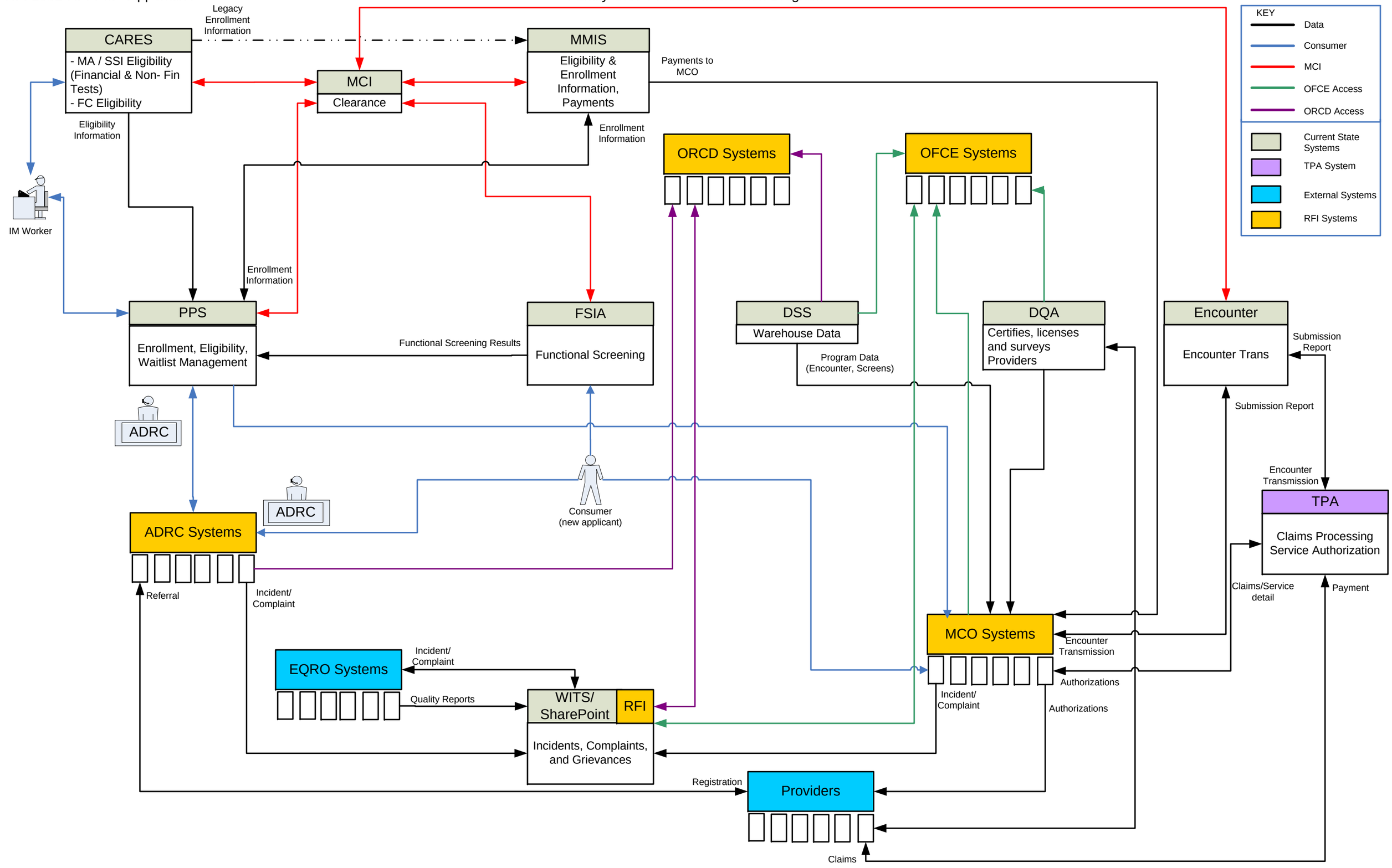# Family Care Process Interaction Diagram